Flexicon FlexEductor™ Liquid Mixing Eductor

Rapid, uniform dispersion of powders into liquids—eliminating plugging, agglomeration, and long mix times.



Engineered for demanding process environments, Flexicon's new Liquid Mixing Eductor represents the next evolution in venturi-driven solid-to-liquid mixing. Using a patented high-efficiency jet nozzle, the system introduces dry materials directly into a pressurized liquid stream, creating a powerful high-shear mixing zone that ensures smooth hydration and dispersion of even the most difficult ingredients—including polymers, starches, gums, hydrocolloids, clays, and pigments.

HIGH-SPEED DOSING RATE | **UNIFORM BLENDING** | **PREVENTS LUMPS, FISHEYES, AND MICROGELS** | **CIP (CLEAN-IN-PLACE) CAPABILITY**

HOW IT WORKS

Motive liquid is supplied by your choice of centrifugal, twin-screw, or rotary lobe pump. As it accelerates through a proprietary nozzle geometry, **positioned ahead of the material inlet**, it generates a strong Venturi vacuum that draws powder from the induction hopper into the high-energy mixing zone. The result: immediate, lump-free integration with dramatically reduced batch times.

INLET
Pressurized Infeed of Fluid Mixture

MATERIAL
Suction Infeed of Bulk Solids

ACTION
Venturi-Driven Conical Diffuser

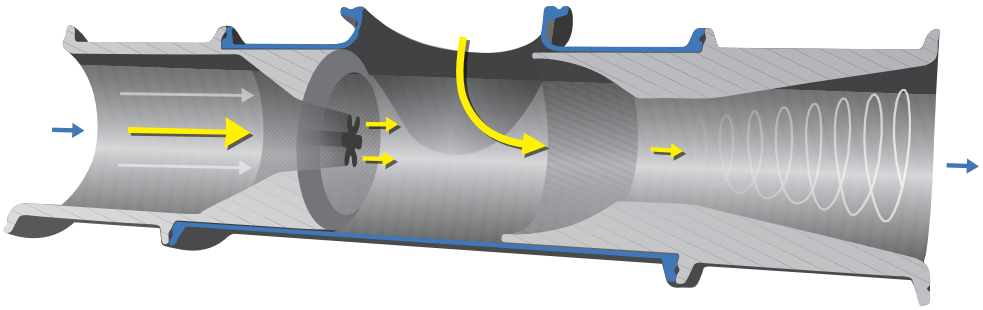

FLEXEDUCTOR™
Twin-Turbine Nozzle Insert

DISCHARGE
Turbulent Mixture Outlet

EXCEPTIONAL RELIABILITY AND LOW MAINTENANCE

- **No moving parts** in the eductor itself, virtually eliminating mechanical failure and ongoing maintenance.
- **Sanitary stainless-steel construction** with full clean-in-place capability ensures hygienic performance, while the compact, easy-access design enables fast cleaning, simple inspection, and seamless integration into existing lines.





Diameter options from 1.0–3.0 in. Optional features include skid mounting, integrated batch/surge tanks, and a hand-wand inlet for direct material pickup from drums, barrels, bags, or Gaylords. 3-A and USDA compliant or industrial models.



PROVEN DESIGN PERFORMANCE

Delivers higher throughput with faster blending and dosing cycles, maintaining uninterrupted material flow while producing consistent, high-quality mixes free of microgels and agglomerates.

Integration-Ready Liquid Mixing Eductors by Flexicon pair seamlessly with bulk bag dischargers, flexible screw conveyors, pneumatic conveying systems, bag dump stations, and loss-in-weight batching setups, making them a natural next step in the process when material is introduced from bags or other sources via conveyors. Ideal for inline pre-mixing or direct feed to downstream process equipment, they can reduce or eliminate the need for dedicated batch tanks.

Whether you're specifying new systems or optimizing existing ones, Flexicon's **FlexEductor™ Liquid Mixing Eductor** delivers uninterrupted material flow with the reliability, efficiency, and cleanability that manufacturing professionals demand.

Ready to simplify your powder-to-liquid processes?

Contact Flexicon today to discuss your application and request a system demonstration.

SEAMLESS PROCESS INTEGRATION
Custom-engineered for your operation

LAB TESTING
Ensure optimal performance before implementation

LIFETIME PERFORMANCE GUARANTEE
Confidence in every system we build

USA
sales@flexicon.com
1 888 FLEXICON

Flexicon® .com

UK +44 1227 374710
AUSTRALIA +61 7 3879 4180
SOUTH AFRICA +27 41 453 1871



TFC25-039

See the full range of equipment at flexicon.com: Flexible Screw Conveyors, Tubular Cable Conveyors, Pneumatic Conveying Systems, Liquid Mixing Eductors, Bulk Bag Unloaders, Bulk Bag Conditioners, Bulk Bag Fillers, Bag Dump Stations, Drum/Box/Container Dumpers, Weigh Batching and Blending Systems, and Automated Plant-Wide Bulk Handling Systems

©2026 Flexicon Corporation. Flexicon Corporation has registrations and pending applications for the trademark FLEXICON throughout the world.